Senior Design Project in Electrical Engineering

SECURE IPV6

NETWORK DESIGN AND TRANSITION FOR USCGA AND BEYOND

1/c Nicholas Williamson, 1/c Benjamin Hannon

Advisors: LCDR Joseph Benin, LT Isaac Nutting, Mr. Scott Howie, Mr. Keith O'Brien (Cisco)

Sponsors: USCGA IS Department (CDR Robert Oatman)

PROJECT BACKGROUND

The USCG utilizes software, hardware, and networks that are configured only for IPv4 configuration, which is currently the most widely used protocol globally. However, IPv4's 4.3×10^9 unique addresses have been almost fully allocated. For the Internet to continue expansion, IPv6 has been developed and allows for 340×10^{36} unique addresses. Before a transition is made, the Coast Guard must understand the implications of enabling an IPv6 configured environment in regards to network performance and security.

PROJECT REQUIREMENTS

- Research IPv6: where it came from, what it does, status worldwide
- Create a dual stack environment and conduct testing for comparative analysis
- Design transition strategy to add IPv6 connectivity to any network
- Complete transition on portion of EENet
- Research network effects of and implement IPsec authentication in lab

DUAL STACK PRODUCTION NETWORK CONFIGURATION

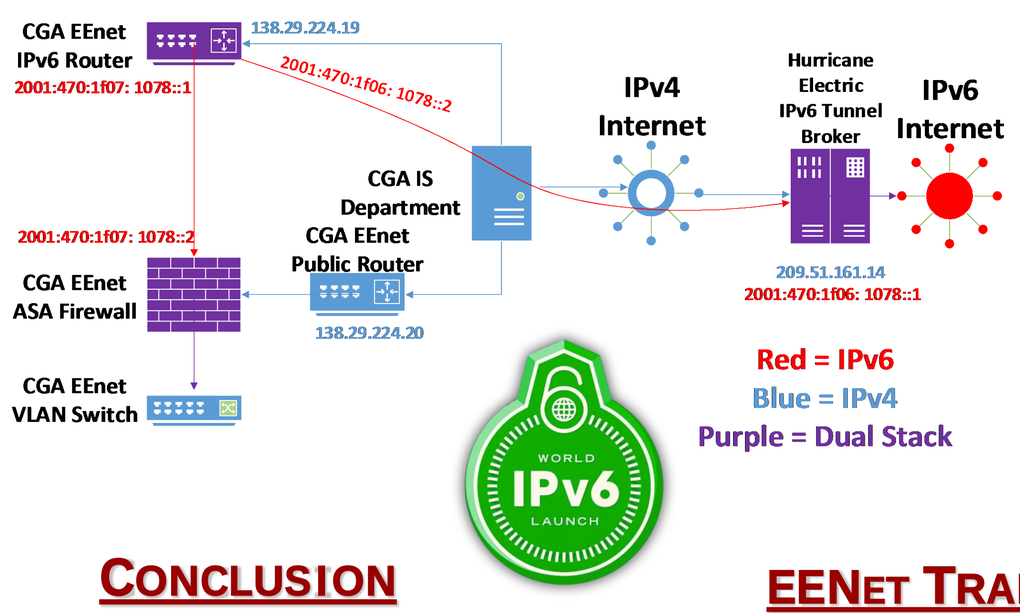

CONCLUSION

Transitioning to have IPv6 connectivity presents minimal disruption to existing networks and is necessary to stay relevant in the information age. The Coast Guard should start transitioning to include IPv6 connectivity now!

FINAL DUAL STACK LAB ENVIRONMENT

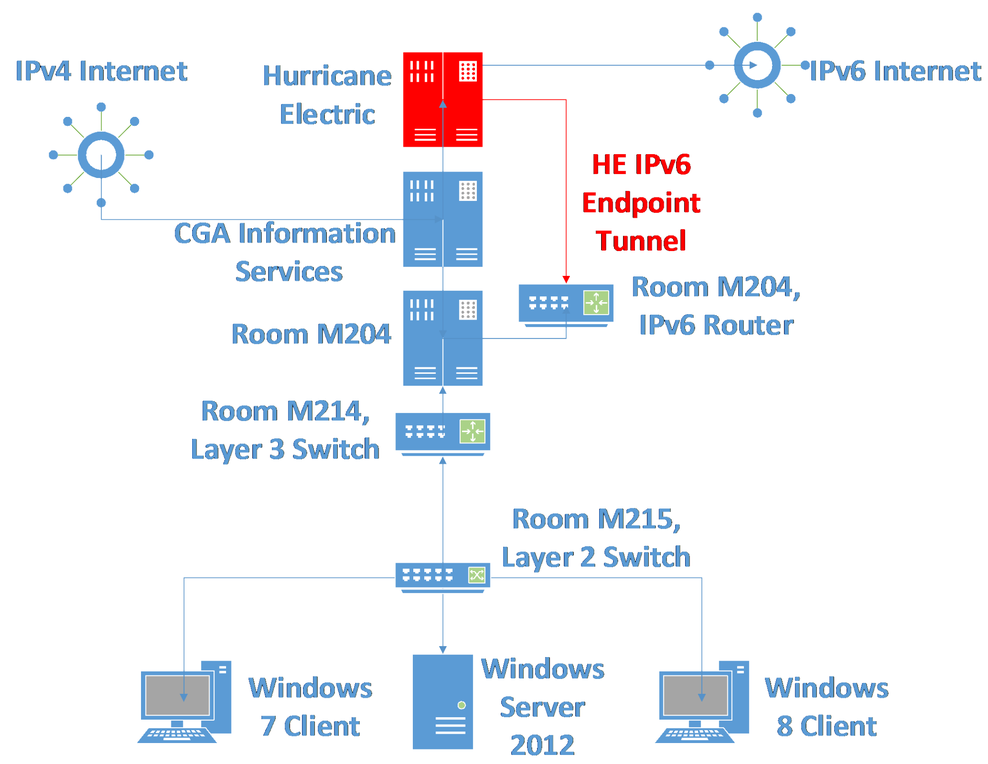

WHY SHOULD WE IMPLEMENT IPV6?

- Many companies require IPv6 to be enabled for technical support
- Most OS's have IPv6 enabled by default. Lack of configuration is a security vulnerability
- The "Internet of Things" provides tremendous opportunities to connect more addressable devices and sensors than ever before – but requires IPv6 to be adopted

IPSEC AUTHENTICATION

Using IPsec to authenticate can be an easy-to-implement, effective method of adding basic security to a network. Below are the results of a 650 MB file transfer test using IPv4, Dual Stack, and Dual Stack with IPsec authentication.

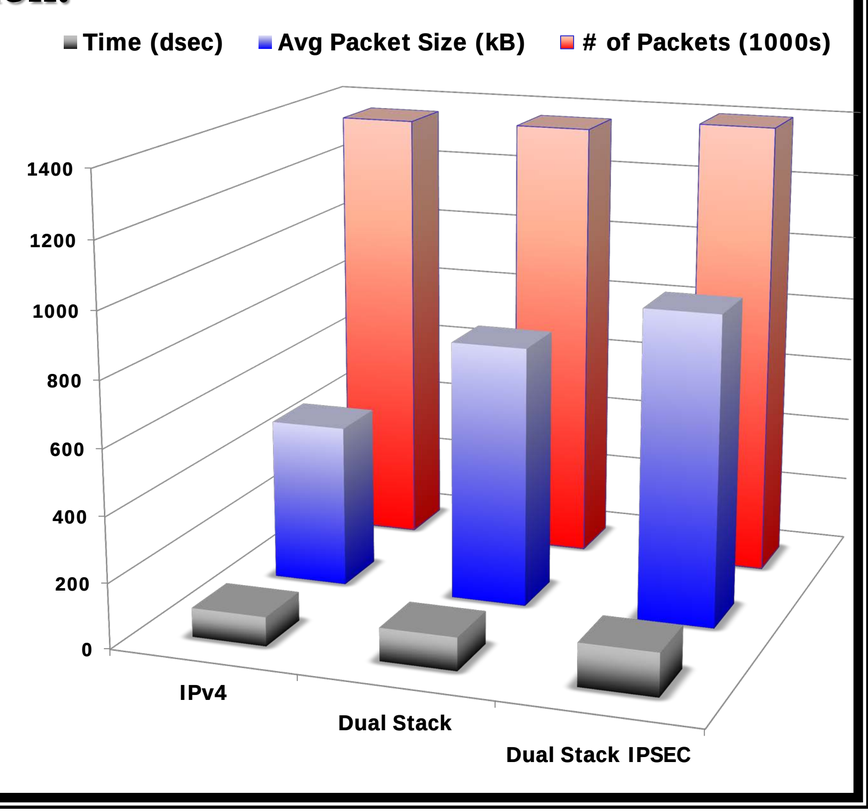

EENET TRANSITION RESULTS

Currently we have dual stacked rooms with EENet connectivity via VLANs 209, 215, and 228 which equates to approximately 40 regularly used computers.