Senior Design Project in Electrical Engineering

THE POWER PROJECT

Generator-Pair Automated Control System as a Cadet Teaching Aid

1/c Jasper Campbell, 1/c Elise Sako

Advisor: LT Aaron Dahlen Sponsor: CG-451 (Liaison: LT Dubinsky)

Governor – Variable Frequency Drive

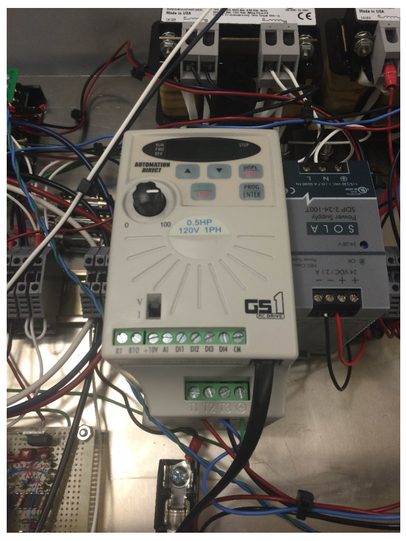

The variable frequency drive regulates the speed of an AC induction motor, which is used as this system's prime mover. This ultimately determines the output frequency of the generator set.

Project Deliverables

The project goals are as follows:

- Create a teaching aid that encompasses two separate generator sets that can be paralleled with an onboard control system at the push of a button.
- Create an onboard monitoring suite that notifies user of basic performance metrics and serves as an alarm system in the case of malfunction.
- Create a simple system to demonstrate basic principles of power generation.

Current Progress

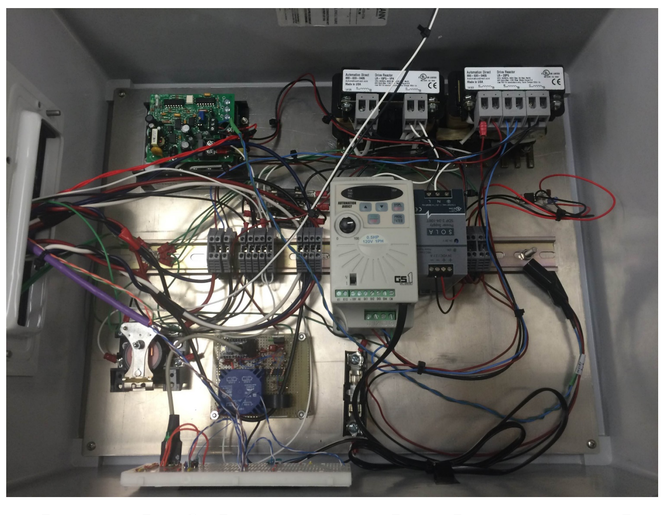

At the end of the 2015 school year, we have successfully designed and built a single generator set that has closed loop control of both its frequency and output voltage.

PROJECT BACKGROUND

The expectations that the fleet has for student engineers can be better met by enhancing the technical knowledge that cadets have with respect to shipboard electrical systems. This idea has sparked interest in cadets having a teaching tool that would simulate generator operations onboard a cutter. This tool would directly improve upon lessons learned in the Electromechanical Systems and Electrical Circuits and Machinery courses at the Coast Guard Academy.

In order to successfully handle the electrical load aboard any cutter, multiple generators may need to be run in parallel. The process of bringing extra generators online requires both the phase and amplitude of the output signals to be perfectly synced. This is typically accomplished aboard cutters through the utilization of a device known as a synchroscope. While the utilization of said device may fundamentally be simple, the process any duty engineer must undergo to ensure the safety of the user and their equipment is fairly cumbersome.

While systems already exist, such as the MPCMS (Machinery Plant Control and Monitoring System) to accomplish our task, the primary benefit of ours is that it will serve as an excellent teaching aid for future electrical engineering courses at the Academy.

Sensor Suite

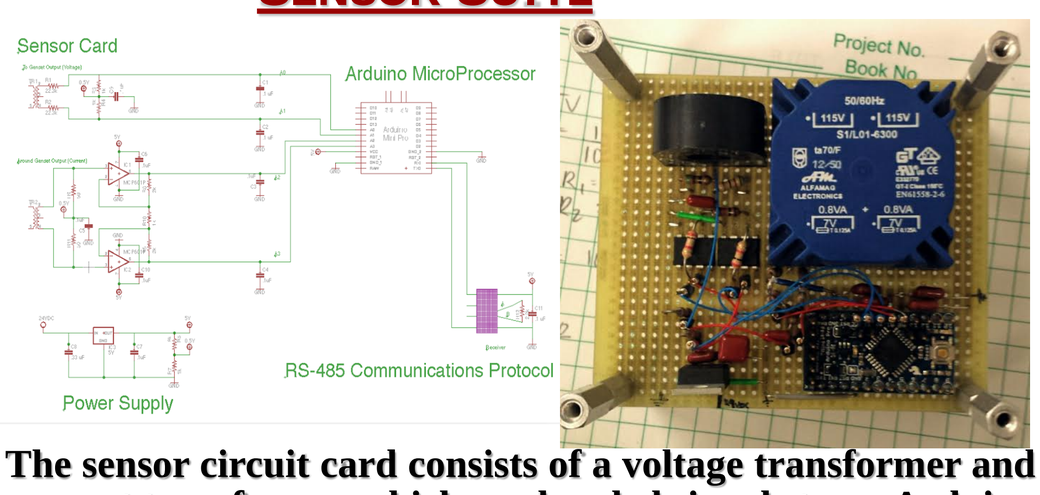

The sensor circuit card consists of a voltage transformer and current transformer which send scaled signals to an Arduino microcontroller, in which calculations are performed for voltage, current, and frequency of the line measured.

Team Power

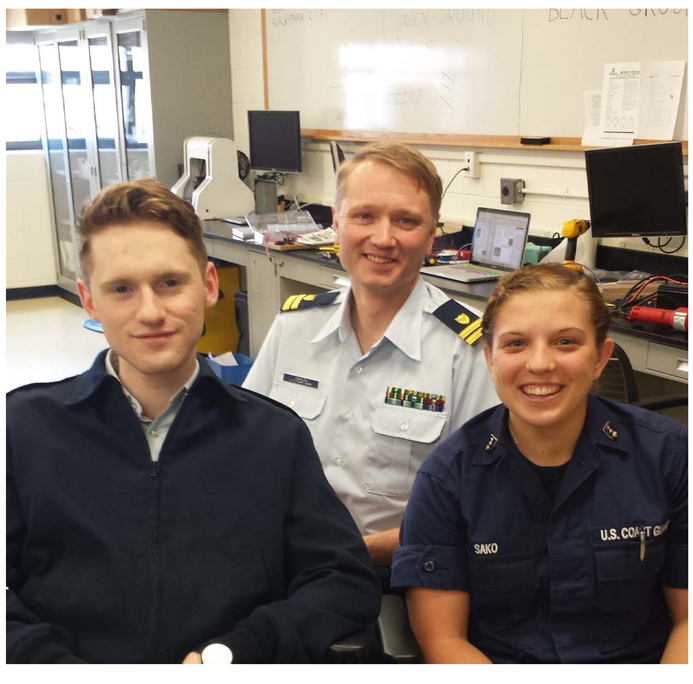

AVR – Automatic Voltage Regulator

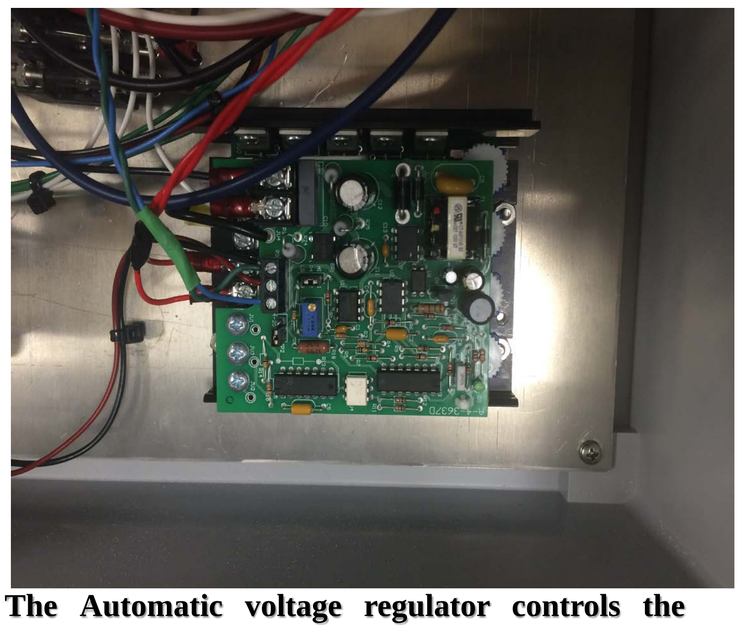

The Automatic voltage regulator controls the amplitude of the synchronous generator's output by supplying a voltage to the field coils inside the generator.

Final Product

The system will consist of two generator sets, composed of an induction motor and a synchronous generator. These are mechanically coupled to convert mechanical energy to electrical. The speed of the prime mover is controlled by a variable frequency drive, essentially serving as the equivalent of a governor to an internal combustion engine. The output voltage is controlled via a DC drive, which emulates an Automatic Voltage Regulator. The output of this generator is monitored via custom-built sensor circuits as shown to the left. Closed-loop control is implemented via a software-based system, wherein sensor-metrics are used to compare the two generator sets' outputs and match them to be paralleled into a single bus. This will power a simple load in order to demonstrate successful implementation of the system.

Future Recommendations

- Another Generator Set needs to be built with closed loop control to parallel with the existing system. This process needs to be automated through the utilization of a breaker and various sensors to detect when it should be completed.
- A user suite also needs to be programmed so that watch standers can monitor and control the system while it operates from a computer program. This suite could potentially provide alarms and also plot trends of the operation of the system from stored data to troubleshoot issues as they arise.